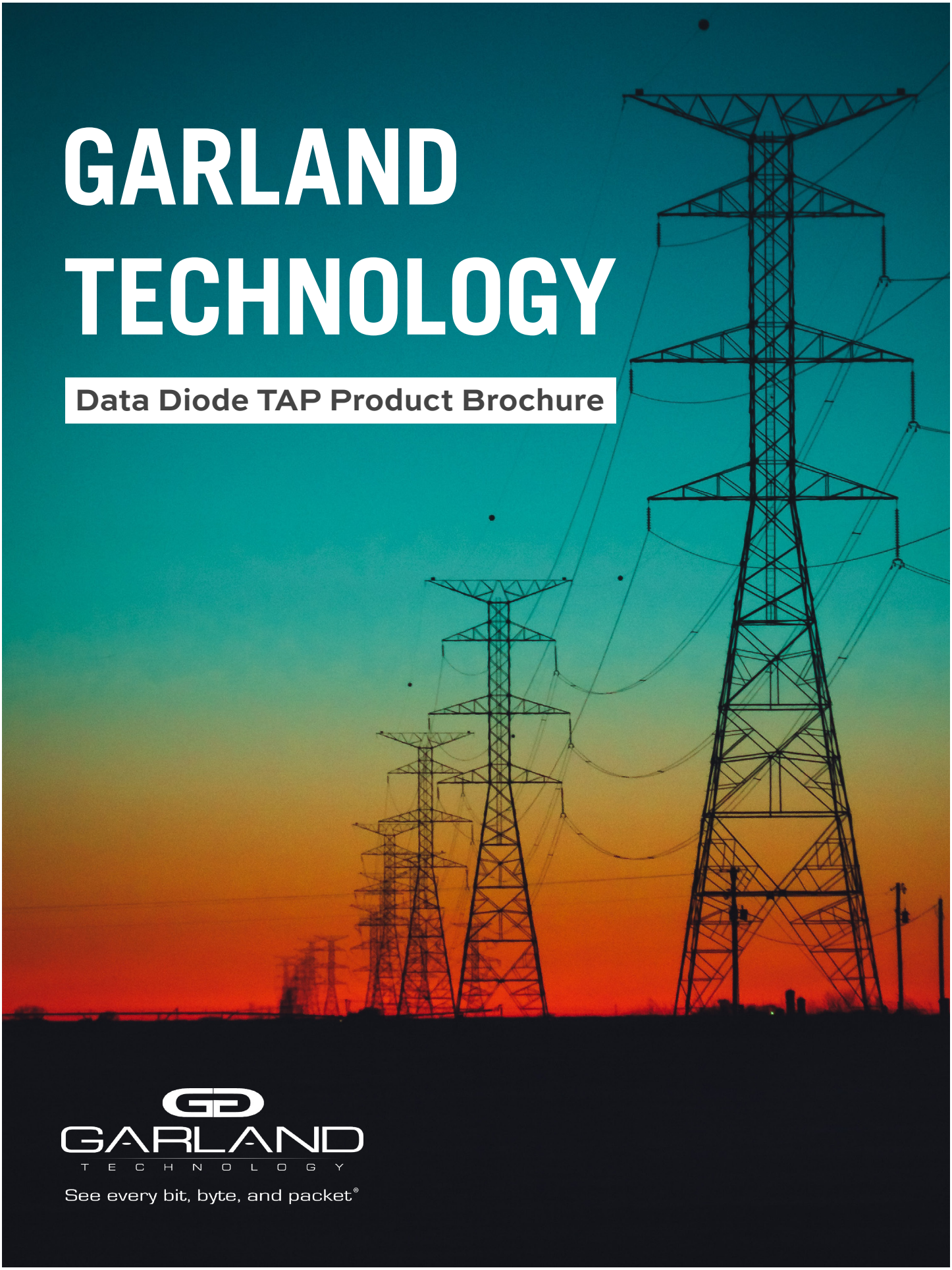

GARLAND TECHNOLOGY

Data Diode TAP Product Brochure

GARLAND TECHNOLOGY

See every bit, byte, and packet®

DATA DIODE TAPS

Data diode TAPs are a purpose-built network hardware device that allows raw data to travel only in one direction. Data diode TAPs can be used as a traffic enforcer, guaranteeing information security or protection of critical digital systems, such as industrial control systems, from inbound cyber attacks.

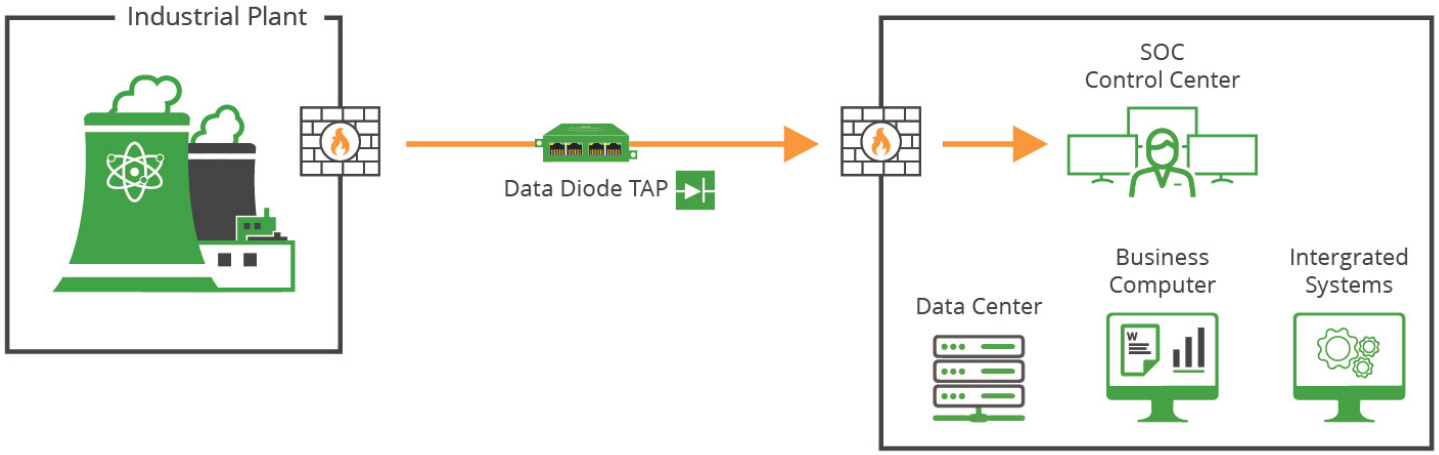

A network TAP creates an exact copy of both sides of the traffic flow, continuously 24/7/365 and does not drop packets, introduce delay, or alter the data. They are either passive or “failsafe,” meaning traffic continues to flow between network devices if power is lost or a monitoring tool is removed, ensuring it isn’t a single point of failure.

Garland Technology’s Data Diode TAPs offer the same high quality visibility as Network TAPs, with the added security that the unidirectional out-of-band traffic, cannot physically flow back to the network.

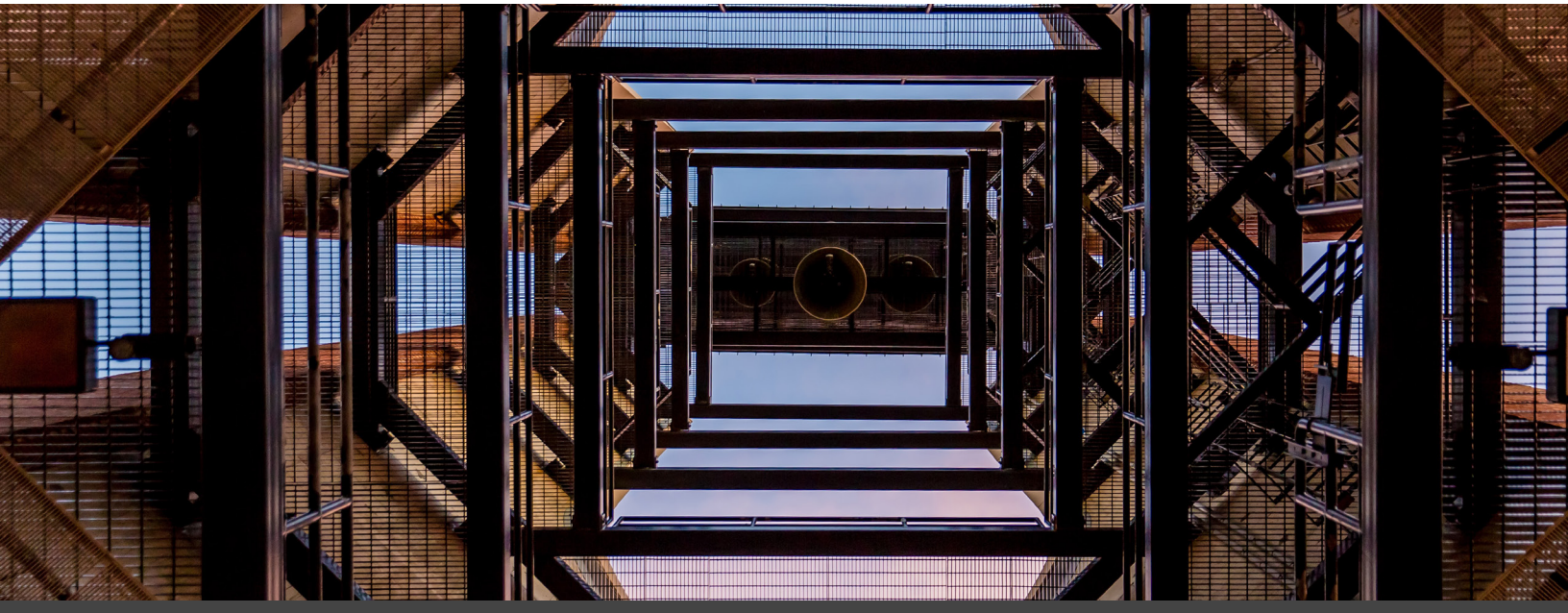

© 2021 Garland Technology. All Rights Reserved.

“DATA DIODE” MONITORING & SECURITY

Analyzing packet level data within a network has become a vital component within an organization’s security architecture. Packet level visibility provides essential information needed to protect against security breaches that affect business operations.

When implementing a security monitoring solution consideration must be given to the potential risk of introducing security vulnerabilities - especially when the approach utilizes SPAN/Mirror ports on switches.

Using SPAM/Mirror ports and then aggregating these feeds together within a Network Packet Broker prior to delivery to the Monitoring/Security tool or service is often considered to be the simplest and lowest cost method – But what are the risks?

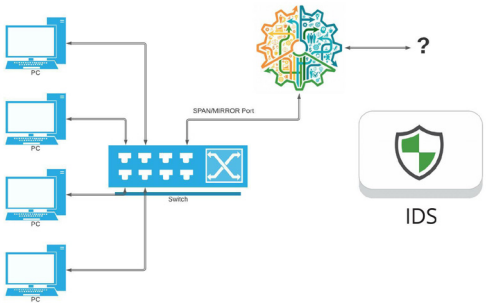

1. SPAN/Mirror ports involve management intervention and re-configuration of the switches. This is not always a simple task (especially where VLAN’s are also involved) and is prone to error.

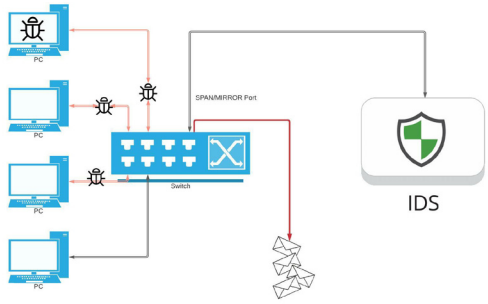

2. SPAN/Mirror ports do not guarantee 100% packet visibility. Due to their lower priority within the Switch, if the live network utilization is high then priority is given to the live network ports and the SPAN/Mirror ports will discard packets. While live network traffic utilization might well be low in normal circumstances during a security compromise traffic levels will often significantly increase resulting in lost visibility.

3. The SPAN/Mirror port is a physical switch port and therefore has both a ‘Transmit’ and also a ‘Receive’ capability. Each SPAN/Mirror connection is ultimately a backdoor into the live network and therefore a potential security risk.

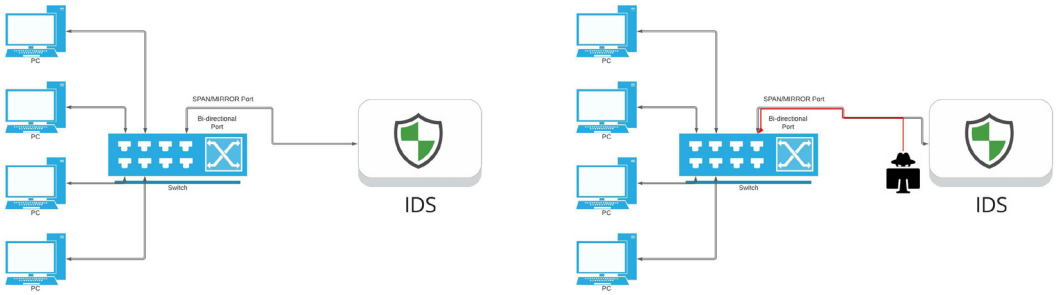

Utilizing “Data Diode” TAPs can remove all three of these vulnerabilities.

© 2021 Garland Technology. All Rights Reserved.

DEPLOYING DATA DIODE TAPS

Best practice is to always use a Network TAP to mirror traffic directly from a network link to the Security Monitoring Tools. Acting at the physical level they can be installed once and never require reconfiguration or removal. A TAP will immediately remove the SPAN/Mirror port configuration and packet discard risks previously highlighted. If the installed Network TAP is a data diode variant then it will provide a unidirectional mirrored data path and overcome the risk of malicious data being introduced back into the live network. It should be noted that all Garland Network TAPs have been developed with Data Diode technology, so the choice of Network Tap is important. Some Passive Fiber TAPs and those active Taps that have a 'data injection' or 'Inline Bypass' capability do not have Data Diode technology.

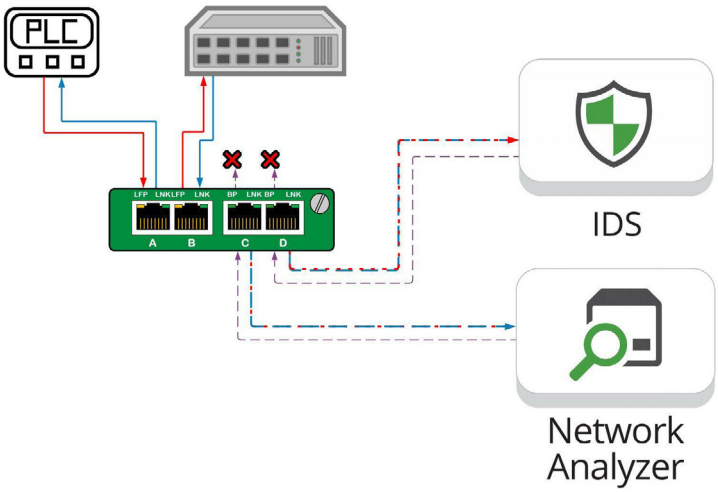

There are also some situations where the use of SPAN/Mirror ports is still needed for visibility. In these instances, it is "Best Practice" to connect the SPAN/Mirror port to a Data Diode TAP and use the TAP's SPAN/Regeneration mode to pass the mirrored SPAN data onto Monitoring/security devices. Using unidirectional Data Diode Taps in this way will ensure that there can be no data passed back into the Switch SPAN/Mirror port.



© 2021 Garland Technology. All Rights Reserved.

DATA DIODE NETWORK TAPS



Data Diode Network TAPs sit in a network segment connecting two appliances like a network switch and a firewall, that support the critical link.

The Data Diode TAP sends a unidirectional copy of that traffic to the out-of-band monitoring tools, the link between the two appliances is unaffected. There is no physical connection between the Data Diode monitoring ports and the network, eliminating any possible intrusion from the destination.

- Protect the source of data streams between network segments that have different security requirements
- Physical hardware separation guarantees unidirectional traffic between network segments
- Supports tap 'breakout,' aggregation, regeneration / SPAN mode

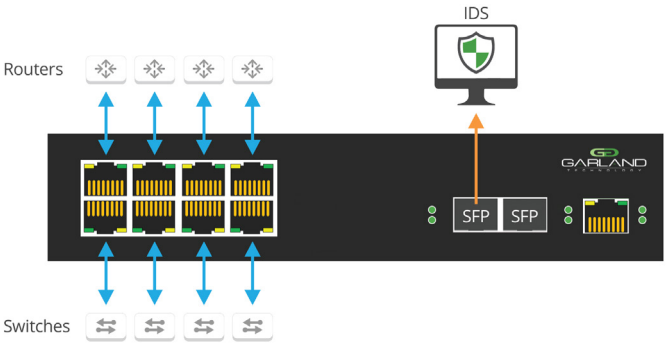

In this scenario you are able to TAP 4 links and provide unidirectional TAP copies of traffic aggregated to one or two ports, without packet injection back onto the network.

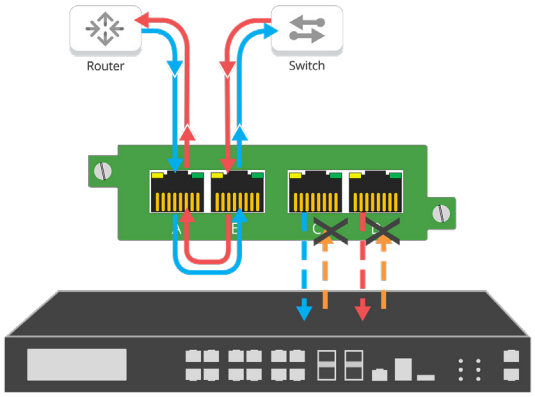

In this scenario you are able to TAP one link and provide unidirectional tap 'Breakout" copies of traffic, without packet injection back onto the network.

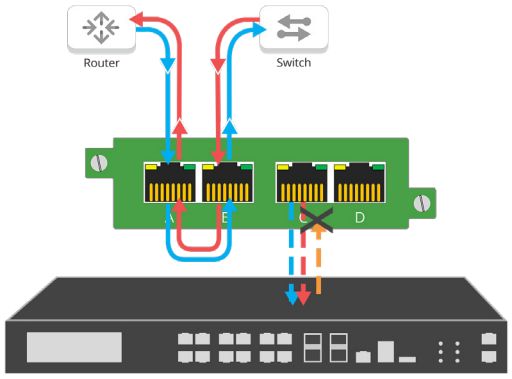

In this scenario you are able to TAP one link and provide unidirectional TAP copies of traffic aggregated to one or two ports, without packet injection back onto the network.

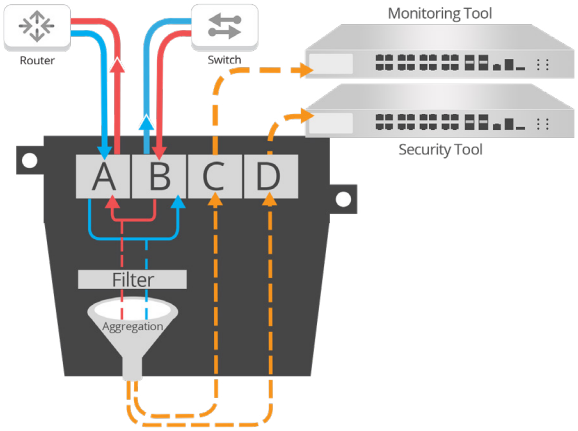

In this scenario you are able to TAP one link and provide unidirectional 'filtered' tap copies of traffic, without packet injection back onto the network.

© 2021 Garland Technology. All Rights Reserved.

Data Diode Breakout Network TAPs

Model #	Network Speed	Network	Monitor	Breakout	Aggregation	Regeneration /SPAN	Failsafe
PT100	10/100M	2 Copper-RJ45	2 Copper-RJ45	Yes	No	No	Failsafe
P1GCCB	10/100/1000M	2 Copper-RJ45	2 Copper-RJ45	Yes	No	No	Failsafe
P1GCCB_OT	10/100/1000Mbps (1Gbps)	Copper - RJ45	Copper - RJ45	Yes	No	No	Failsafe
M100CCBm	10/100M	2 Mighty Mouse 10/100M	2 Mighty Mouse 10/100M	Yes	No	No	Failsafe
M1GCCBm	10/100/1000M	2 Mighty Mouse 10/100/1000M	2 Mighty Mouse 10/100/1000M	Yes	No	No	Failsafe

Passive Single Mode Fiber Data Diode TAPs

Model #	Network Speed	No. of TAPs	Split Ratio*	Wavelengths	Media	Connector/Mode	Failsafe
OS1501	1/10/25/40/100G	1	50/50	1310/1550nm	Fiber-OS1	Fiber-LC Single-mode Fiber	Passive
OS1601	1/10/25/40/100G	1	60/40	1310/1550nm	Fiber-OS1	Fiber-LC Single-mode Fiber	Passive
OS1701	1/10/25/40/100G	1	70/30	1310/1550nm	Fiber-OS1	Fiber-LC Single-mode Fiber	Passive
OS2501	1/10/25/40/100G	1	50/50	1310/1550nm	Fiber-OS2	Fiber-LC Single-mode Fiber	Passive
OS2701	1/10/25/40/100G	1	70/30	1310/1550nm	Fiber-OS2	Fiber-LC Single-mode Fiber	Passive
OS1502	1/10/25/40/100G	2	50/50	1310/1550nm	Fiber-OS1	Fiber-LC Single-mode Fiber	Passive
OS1702	1/10/25/40/100G	2	70/30	1310/1550nm	Fiber-OS1	Fiber-LC Single-mode Fiber	Passive
OS2502	1/10/25/40/100G	2	50/50	1310/1550nm	Fiber-OS2	Fiber-LC Single-mode Fiber	Passive
OS2702	1/10/25/40/100G	2	70/30	1310/1550nm	Fiber-OS2	Fiber-LC Single-mode Fiber	Passive
OS1503	1/10/25/40/100G	3	50/50	1310/1550nm	Fiber-OS1	Fiber-LC Single-mode Fiber	Passive
OS1703	1/10/25/40/100G	3	70/30	1310/1550nm	Fiber-OS1	Fiber-LC Single-mode Fiber	Passive
OS2503	1/10/25/40/100G	3	50/50	1310/1550nm	Fiber-OS2	Fiber-LC Single-mode Fiber	Passive
OS2703	1/10/25/40/100G	3	70/30	1310/1550nm	Fiber-OS2	Fiber-LC Single-mode Fiber	Passive
OS1504	1/10/25/40/100G	4	50/50	1310/1550nm	Fiber-OS1	Fiber-LC Single-mode Fiber	Passive
OS1704	1/10/25/40/100G	4	70/30	1310/1550nm	Fiber-OS1	Fiber-LC Single-mode Fiber	Passive
OS2504	1/10/25/40/100G	4	50/50	1310/1550nm	Fiber-OS2	Fiber-LC Single-mode Fiber	Passive
OS2704	1/10/25/40/100G	4	70/30	1310/1550nm	Fiber-OS2	Fiber-LC Single-mode Fiber	Passive

© 2021 Garland Technology. All Rights Reserved.

Passive Multi-mode Fiber Data Diode TAPs

Model #	Network Speed	No. of TAPs	Split Ratio*	Wavelengths	Media	Connector/Mode	Failsafe
OM1501	1/10G	1	50/50	850/1300nm	Fiber-OM1	Fiber-LC Multi-mode Fiber	Passive
OM1701	1/10G	1	70/30	850/1300nm	Fiber-OM1	Fiber-LC Multi-mode Fiber	Passive
OM3501	1/10/25G	1	50/50	850/1300nm	Fiber-OM3	Fiber-LC Multi-mode Fiber	Passive
OM4501	1/10/25G	1	50/50	850nm	Fiber-OM3/OM4	Fiber-LC Multi-mode Fiber	Passive
OM4701	1/10/25G	1	70/30	850nm	Fiber-OM3/OM4	Fiber-LC Multi-mode Fiber	Passive
OM5501	1/10/25/40/100G*	1	50/50	800-950nm	Fiber-OM3/OM4	Fiber-LC Multi-mode Fiber	Passive
OM5701	1/10/25/40/100G*	1	70/30	850-950nm	Fiber OM5	Fiber-LC-Multi-Mode	Passive
OM1502	1/10G	2	50/50	850/1300nm	Fiber-OM1	Fiber-LC Multi-mode Fiber	Passive
OM1702	1/10G	2	70/30	850/1300nm	Fiber-OM1	Fiber-LC Multi-mode Fiber	Passive
OM3502	1/10/25G	2	50/50	850/1300nm	Fiber-OM3	Fiber-LC Multi-mode Fiber	Passive
OM4502	1/10/25G	2	50/50	850nm	Fiber-OM3/OM4	Fiber-LC Multi-mode Fiber	Passive
OM4702	1/10/25G	2	70/30	850nm	Fiber-OM3/OM4	Fiber-LC Multi-mode Fiber	Passive
OM5502	1/10/25/40/100G*	2	50/50	850-950nm	Fiber OM5	Fiber-LC-Multi-Mode	Passive
OM5702	1/10/25/40/100G*	2	70/30	850-950nm	Fiber OM5	Fiber-LC-Multi-Mode	Passive
OM1503	1/10G	3	50/50	850/1300nm	Fiber-OM1	Fiber-LC Multi-mode Fiber	Passive
OM1703	1/10G	3	70/30	850/1300nm	Fiber-OM1	Fiber-LC Multi-mode Fiber	Passive
OM3503	1/10/25G	3	50/50	850/1300nm	Fiber-OM3	Fiber-LC Multi-mode Fiber	Passive
OM4503	1/10/25G	3	50/50	850nm	Fiber-OM3/OM4	Fiber-LC Multi-mode Fiber	Passive
OM4703	1/10/25G	3	70/30	850nm	Fiber-OM3/OM4	Fiber-LC Multi-mode Fiber	Passive
OM5503	1/10/25/40/100G*	3	50/50	850-950nm	Fiber OM5	Fiber-LC Multi-mode Fiber	Passive
OM5703	1/10/25/40/100G*	3	70/30	850-950nm	Fiber OM5	Fiber-LC Multi-mode Fiber	Passive
OM1504	1/10G	4	50/50	850/1300nm	Fiber-OM1	Fiber-LC Multi-mode Fiber	Passive
OM1704	1/10G	4	70/30	850/1300nm	Fiber-OM1	Fiber-LC Multi-mode Fiber	Passive
OM3504	1/10/25G	4	50/50	850/1300nm	Fiber-OM3	Fiber-LC Multi-mode Fiber	Passive
OM4504	1/10/25G	4	50/50	850nm	Fiber-OM3/OM4	Fiber-LC Multi-mode Fiber	Passive
OM4704	1/10/25G	4	70/30	850nm	Fiber-OM3/OM4	Fiber-LC Multi-mode Fiber	Passive
OM5504	1/10/25/40/100G*	4	50/50	850-950nm	Fiber OM5	Fiber-LC Multi-mode Fiber	Passive
OM5704	1/10/25/40/100G*	4	70/30	850-950nm	Fiber OM5	Fiber-LC Multi-mode Fiber	Passive
OS2501M	1/10/25/40/100G	1	50/50	1290-1330nm 1530-1570nm	Fiber-OS1/OS2	Fiber-LC Single-mode Fiber	Passive
OS2701M	1/10/25/40/100G	1	70/30	1290-1330nm 1530-1570nm	Fiber-OS1/OS2	Fiber-LC Single-mode Fiber	Passive
OM1501M	1/10G	1	50/50	850-1300nm	Fiber-OM1/OM2	Fiber-LC Multi-mode Fiber	Passive
OM1701M	1/10G	1	70/30	850-1300nm	Fiber-OM1/OM2	Fiber-LC Multi-mode Fiber	Passive
OM4501M	1/10/25G	1	50/50	850nm	Fiber-OM3/OM4	Fiber-LC Multi-mode Fiber	Passive
OM4701M	1/10/25G	1	70/30	850nm	Fiber-OM3/OM4	Fiber-LC Multi-mode Fiber	Passive
OM5501M	1/10/25/40/100G*	1	50/50	850-950nm	Fiber OM5	Fiber-LC-Multi-Mode	Passive
OM5701M	1/10/25/40/100G*	1	70/30	850-950nm	Fiber OM5	Fiber-LC-Multi-Mode	Passive

© 2021 Garland Technology. All Rights Reserved.

Data Diode Aggregator TAPs

Model #	Network Speed	Network	Monitor	Breakout	Aggregation	Regeneration /SPAN	Fail-safe
P100FXCA	-	(2) 100Base-FX	(2) Copper-RJ45 100/1000M (1G)	Yes	Yes	No	Passive
P100LXCA	-	(2) 100Base-LX	(2) Copper-RJ45 100/1000M (1G)	Yes	Yes	No	Passive
P100CCA	100M	(2) Copper-RJ45	(2) Copper-RJ45	No	Yes	Yes	Failsafe
P1GCCAS	10/100/1000M	(2) Copper-RJ45	(2) Copper-RJ45	Yes	Yes	Yes	Failsafe
P1GCSAS	10/100/1000M	(2) Copper-RJ45	(2) SFP	Yes	Yes	Yes	Failsafe
P1GMCA	1G	(2) SX MMF-LC	(2) Copper-RJ45	Yes	Yes	Yes	Passive
P1GMSA	1G	(2) SX MMF - LC	(2) SFP	Yes	Yes	Yes	Passive
P1GSCA	1G	(2) LX SMF - LC	(2) Copper-RJ45	Yes	Yes	Yes	Passive
P1GSSA	1G	(2) LX SMF - LC	(2) SFP	Yes	Yes	Yes	Passive
P10GMSA-5	1G/10G	(2) MMF 1G-SX/10G-SR	(2) SFP+	Yes	Yes	Yes	Passive
P10GMSA-6	1G/10G	(2) MMF 1G-SX/10G-SR	(2) SFP+	Yes	Yes	Yes	Passive
P10GMSA-7	1G/10G	(2) MMF 1G-SX/10G-SR	(2) SFP+	Yes	Yes	Yes	Passive
P10GSSA-5	1G/10G	(2) SMF 1G-SX/10G-LR	(2) SFP+	Yes	Yes	Yes	Passive
P10GSSA-6	1G/10G	(2) SMF 1G-SX/10G-LR	(2) SFP+	Yes	Yes	Yes	Passive
P10GSSA-7	1G/10G	(2) SMF 1G-SX/10G-LR	(2) SFP+	Yes	Yes	Yes	Passive
INT1G10CSA	10/100/1000M	(8) Copper-RJ45	(2) SFP	Yes	Yes	Yes	Failsafe
INT1G10CSA-DC	10/100/1000M	10/100/1000M	(2) SFP	Yes	Yes	Yes	Failsafe

SMF: Single-mode Fiber | MMF: Multi-mode Fiber

Data Diode XtraTAP (Filtering)

Model #	Network Speed	Network	Monitor	Breakout	Aggregation	Filtering	Regeneration /SPAN	Failsafe
P1GCCFE	10/100/1000M	2 Copper-RJ45	2 Copper-RJ45	Yes	Yes	Yes	Yes	Failsafe
P1GCSFE	10/100/1000M	2 Copper-RJ45	2 SFP	Yes	Yes	Yes	-	Failsafe
P1GMCFE	1G	2 SX MMF	2 Copper-RJ45	Yes	Yes	Yes	Yes	Passive
P1GMSFE	1G	2 SX MMF	2 SFP	Yes	Yes	Yes	Yes	Passive
P1GSCFE	1G	2 LX SMF	2 Copper-RJ45	Yes	Yes	Yes	Yes	Passive
P1GSSFE	1G	2 LX SMF	2 SFP	Yes	Yes	Yes	Yes	Passive
P10GSSFE-5	1/10G	LR SMF	SFP+	Yes	Yes	Yes	Yes	Passive
P10GSSFE-6	1/10G	LR SMF	SFP+	Yes	Yes	Yes	Yes	Passive
P10GSSFE-7	1/10G	LR SMF	SFP+	Yes	Yes	Yes	Yes	Passive
P10GMSFE-5	1/10G	SR MMF	SFP+	Yes	Yes	Yes	Yes	Passive
P10GMSFE-6	1/10G	SR MMF	SFP+	Yes	Yes	Yes	Yes	Passive
P10GMSFE-7	1/10G	SR MMF	SFP+	Yes	Yes	Yes	Yes	Passive

SMF: Single-mode Fiber | MMF: Multi-mode Fiber

© 2021 Garland Technology. All Rights Reserved.

Data Diode XtraTAP: Network Packet Broker Hybrid

Model #	Network Speed	Network TAPs	Split Ratio	10G Ports	40G Ports	Power	Dual Power	Failsafe
INT10G12MSFE-5	1G/10G	MMF 1G-SX /10G-SR	50/50	(10) SFP+	-	AC Power 120W	Yes	Passive
INT10G12MSFE-6	1G/10G	MMF 1G-SX /10G-SR	60/40	(10) SFP+	-	AC Power 120W	Yes	Passive
INT10G12MSFE-7	1/10G	MMF 1G-SX /10G-SR	70/30	(10) SFP+	-	AC Power 120W	Yes	Passive
INT10G12SSFE-5	1/10G	SMF 1G-LX /10G-LR	50/50	(10) SFP+	-	AC Power 120W	Yes	Passive
INT10G12SSFE-6	1G/10G	SMF 1G-LX /10G-LR	60/40	(10) SFP+	-	AC Power 120W	Yes	Passive
INT10G12SSFE-7	1G/10G	SMF 1G-LX /10G-LR	70/30	(10) SFP+	-	AC Power 120W	Yes	Passive
INT10G12ESFE-5	1G/10G	SMF 1G-LX /10G-ER	50/50	(10) SFP+	-	AC Power 120W	Yes	Passive
INT10G12ESFE-6	1G/10G	SMF 1G-LX /10G-ER	60/40	(10) SFP+	-	AC Power 120W	Yes	Passive
INT10G12ESFE-7	1G/10G	SMF 1G-LX /10G-ER	70/30	(10) SFP+	-	AC Power 120W	Yes	Passive
INT10G8SR56-5	1G/10G/40G	(4) MMF 1G-SX /10G-SR	50/50	(32) 1G/10G SFP+	(4) QSFP+ (4x 10G)	AC Power 120W	Yes	Passive
INT10G8SR56-6	1G/10G/40G	(4) MMF 1G-SX /10G-SR	60/40	(32) 1G/10G SFP+	(4) QSFP+ (4x 10G)	AC Power 120W	Yes	Passive
INT10G8SR56-7	1G/10G/40G	(4) MMF 1G-SX /10G-SR	70/30	(32) 1G/10G SFP+	(4) QSFP+ (4x 10G)	AC Power 120W	Yes	Passive
INT10G8LR56-5	1G/10G/40G	(4) SMF 1G-LX /10G-LR	50/50	(32) 1G/10G SFP+	(4) QSFP+ (4x 10G)	AC Power 120W	Yes	Passive
INT10G8LR56-6	1G/10G/40G	(4) SMF 1G-LX /10G-LR	60/40	(32) 1G/10G SFP+	(4) QSFP+ (4x 10G)	AC Power 120W	Yes	Passive
INT10G8LR56-7	1G/10G/40G	(4) SMF 1G-LX /10G-LR	70/30	(32) 1G/10G SFP+	(4) QSFP+ (4x 10G)	AC Power 120W	Yes	Passive

SMF: Single-mode Fiber | MMF: Multi-mode Fiber

Data Diode Modular TAPs

Model #	Network Speed	Network	Monitor	Breakout	Aggregation	Regeneration /SPAN	Failsafe
M100CCB	10/100M	2 Copper-RJ45	2 Copper-RJ45	Yes	No	No	Passive
M1GCCB	10/100/1000M	2 Copper-RJ45	2 Copper-RJ45	Yes	No	No	Failsafe
M1GMCA	1G	2 SX MMF	2 Copper-RJ45	Yes	Yes	Yes	Passive
M1GMSA	1G	2 SX MMF	2 SFP	Yes	Yes	Yes	Passive
M1GSCA	1G	2 LX SMF	2 Copper-RJ45	Yes	Yes	Yes	Passive
M1GSSA	1G	2 LX SMF	2 SFP	Yes	Yes	Yes	Passive
M1GCCF	10/100/1000M	2 Copper-RJ45	2 Copper-RJ45	Yes	Yes	Yes	Failsafe
M1GCSF	10/100/1000M	2 Copper-RJ45	2 SFP	Yes	Yes	Yes	Failsafe
M1GMCF	1G	2 SX MMF	2 Copper-RJ45	Yes	Yes	Yes	Passive
M1GMSF	1G	2 SX MMF	2 SFP	Yes	Yes	Yes	Passive
M1GSCF	1G	2 LX SMF	2 Copper-RJ45	Yes	Yes	Yes	Passive
M1GSSF	1G	2 LX SMF	2 SFP	Yes	Yes	Yes	Passive

SMF: Single-mode Fiber | MMF: Multi-mode Fiber

Regen: Dual Breakout

Model #	Network Speed	Network	Monitor	Breakout	Aggregation	Regeneration /SPAN	Failsafe
INT10G12SSV2-5	10G	LR SMF	SFP+	-	-	-	Passive
INT10G12SSV2-6	10G	LR SMF	SFP+	-	-	-	Passive
INT10G12SSV2-7	10G	LR SMF	SFP+	-	-	-	Passive
INT10G12MSV2-5	10G	SR MMF	SFP+	-	-	-	Passive
INT10G12MSV2-6	10G	SR MMF	SFP+	-	-	-	Passive
INT10G12MSV2-7	10G	SR MMF	SFP+	-	-	-	Passive

SMF: Single-mode Fiber | MMF: Multi-mode Fiber

© 2021 Garland Technology. All Rights Reserved.

DATA DIODE SPAN TAPS



Data Diode SPAN TAPs provide network traffic for out-of-band monitoring, specifically designed not to send traffic back onto the network.

These purpose-built network hardware devices enforce one-way data flow for switch SPAN links with physical hardware separation, guaranteeing protection of critical digital systems, such as industrial control systems (ICS), from inbound cyber threats.

- Protect the source of data streams like switch SPAN ports between network segments that have different security requirements
- Physical hardware separation guarantees unidirectional traffic between network segments
- Supports regeneration / SPAN mode

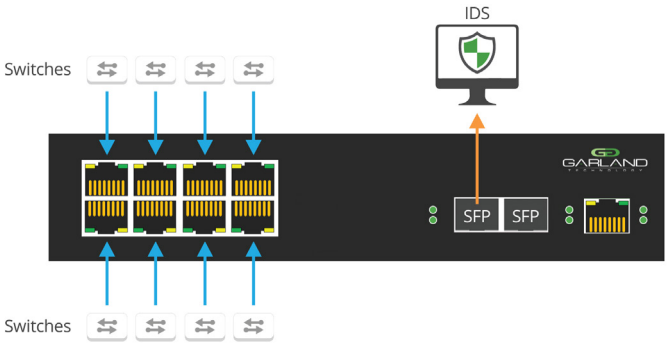

In this scenario you are able to ensure 8 SPAN ports provide copies of traffic aggregated to one or two ports, without packet injection back onto the network.

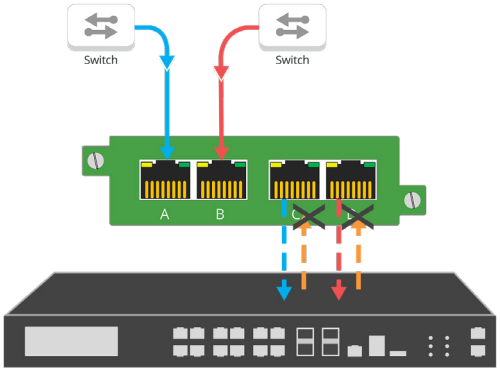

In this scenario you are able to ensure 2 SPAN ports provide 1 copy of unidirectional traffic each, without packet injection back onto the network.

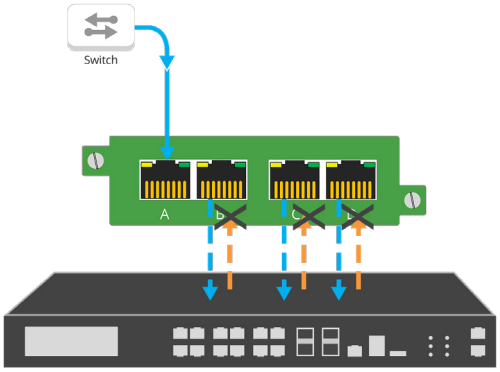

In this scenario you are able to ensure 1 SPAN port provides 1-3 copies of unidirectional traffic, without packet injection back onto the network.

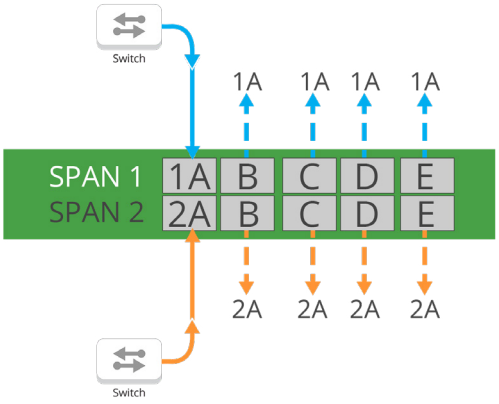

In this scenario you are able to ensure 2 SPAN ports provide 1-4 copies of unidirectional traffic each, without packet injection back onto the network.

© 2021 Garland Technology. All Rights Reserved.

Data Diode SPAN TAP

Model #	Network Speed	Network	Monitor	Breakout	Aggregation	Regeneration /SPAN
P1GCCAS-Custom	10/100/1000M	2 Copper-RJ45	2 Copper-RJ45	No	No	Yes
CTAP-P1GCCREG	10/100/1000M	2 Copper-RJ45	2 Copper-RJ45	No	No	No

RegenTAP: Dual Breakout SPAN 1x4 Data Diode

Model #	Network Speed	Ports	Power
INT10G10SP1	1/10G	(10) SFP+	120W

Aggregator TAP: SPAN Data Diodes

Model #	Network Speed	Network	Monitor	Breakout	Aggregation	Regeneration /SPAN
INT1G10CSASP	10/100/1000M	8 Copper-RJ45	2 SFP	No	Yes	Yes
INT1G10CSASPDC	10/100/1000M	8 Copper-RJ45	2 SFP	No	Yes	Yes

RegenTAP: 1x5

Model #	Network Speed	Network	Split Ratio	Failsafe	Monitor	Power
INT10G12MSB5-5	10G	SR MMF	50/50	Passive	SFP+	120W
INT10G12MSB5-6	10G	SR MMF	60/40	Passive	SFP+	120W
INT10G12MSB5-7	10G	SR MMF	70/30	Passive	SFP+	120W
INT10G12SSB5-5	10G	LR SMF	50/50	Passive	SFP+	120W
INT10G12SSB5-6	10G	LR SMF	60/40	Passive	SFP+	120W
INT10G12SSB5-7	10G	LR SMF	70/30	Passive	SFP+	120W

SMF: Single-mode Fiber | MMF: Multi-mode Fiber

©2021 Garland Technology LLC. All Rights Reserved. The information in this document, believed by Garland Technology to be accurate as of the date of publication, is subject to change without notice. Garland Technology assumes no responsibility for any errors or omissions in this document and shall have no obligation to you as a result of having made this document available to you or based upon the information it contains.